AUTOMATIC GI.MA.

TRANSFER MACHINES - ROTARY TABLES - MACHINING EQUIPMENTS
HORIZONTAL AND VERTICAL 3-AXIS CNC MACHINING CENTERS
MACHINING UNITS - SUPPORTS AND POSITIONING SLIDES

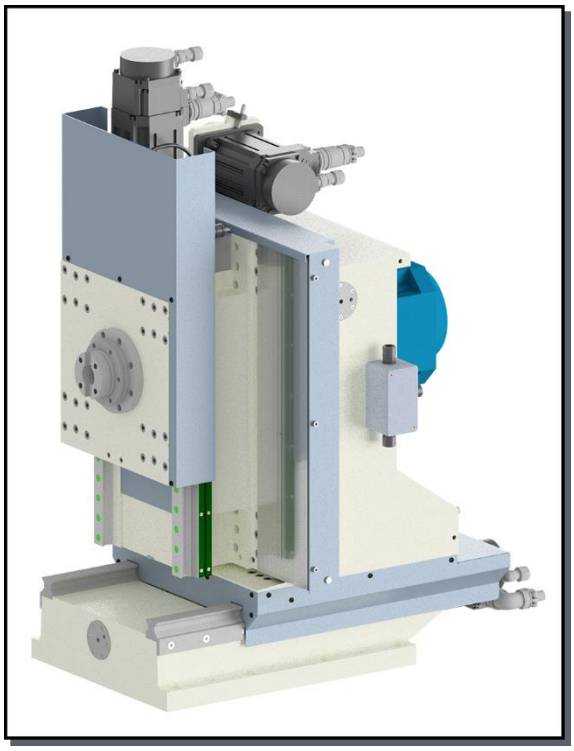

HORIZONTAL 3-AXIS CNC MACHINING CENTER

	DADA-O
Feed	Ground ball screws Ø25p5 mm
X/Z-axis guideways	Roller linear guideways size 25mm
Y-axis guideways	Roller linear guideways size 30mm
X-axis stroke	125 mm
Y-axis stroke	140 mm
Z-axis stroke	145 mm
Forced lubrification	Linear guideways (12p), flanged nuts (3p)
Limit switches	24 Vdc inductive sensors
Axis motor	Brushless 3,5Nm
Axis feed	1÷20000 mm/min

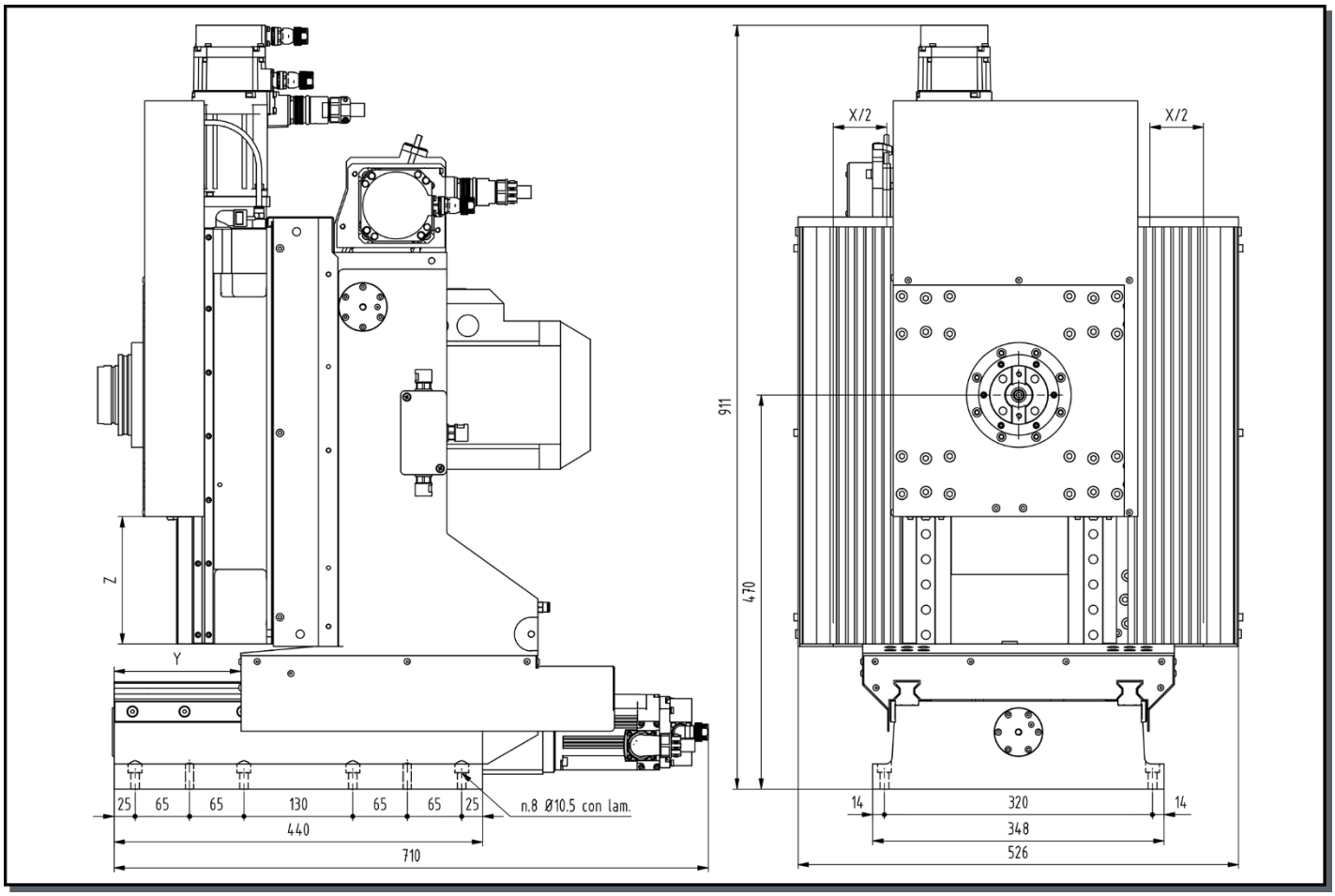

AUTOMATIC GI.MA. - Via F. Parri, 6 - Treviglio (BG) - Italy - Phone +39 0363 301004
E-mail info@automaticgima.it - Web site www.automaticgima.it